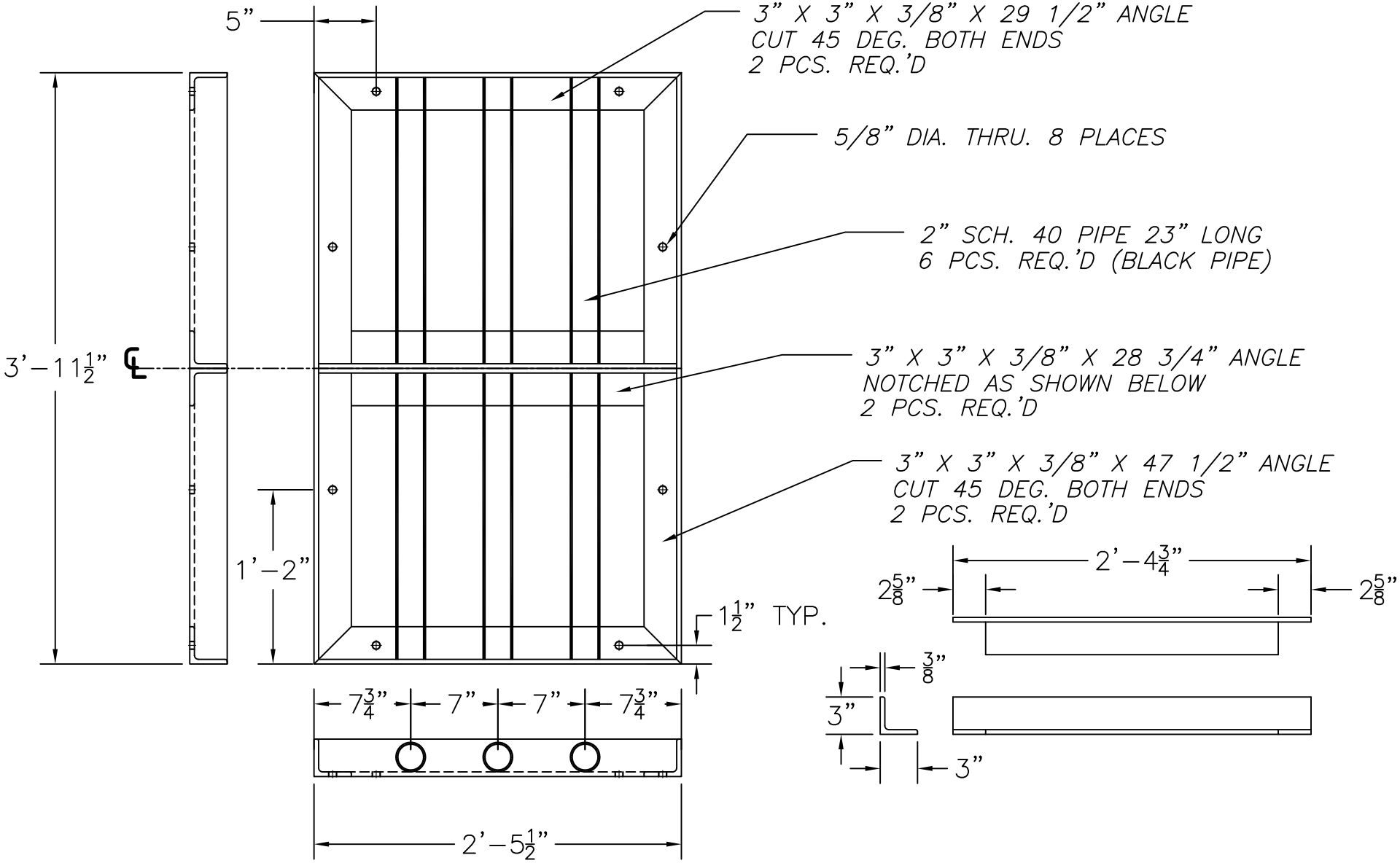

NOTE: HOT DIP GALV. AFTER FABRICATION

PC

OR EQUAL
PRECAST COMPANY